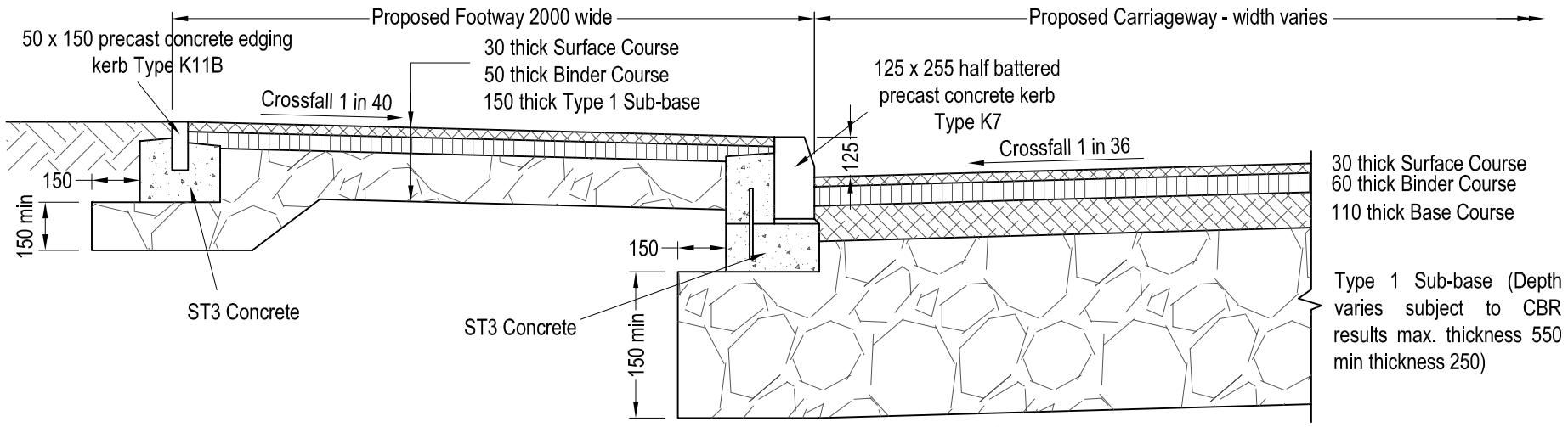

MINOR ACCESS ROAD TYPE A2/1 or A3/1
TYPICAL SECTION

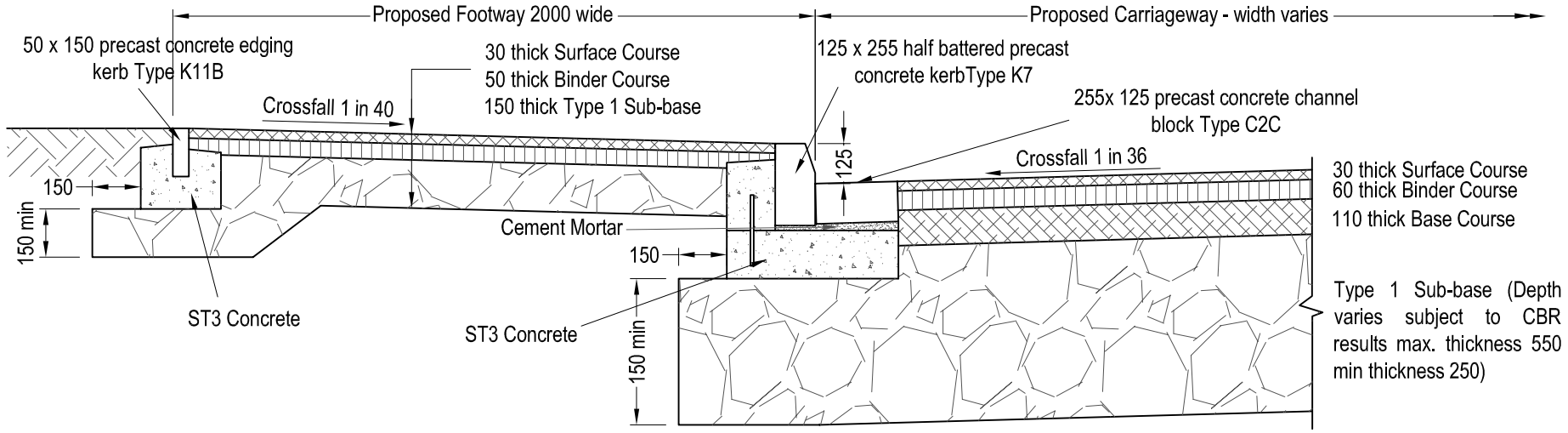

MINOR ACCESS ROAD TYPE A2/2 or A3/2
TYPICAL SECTION

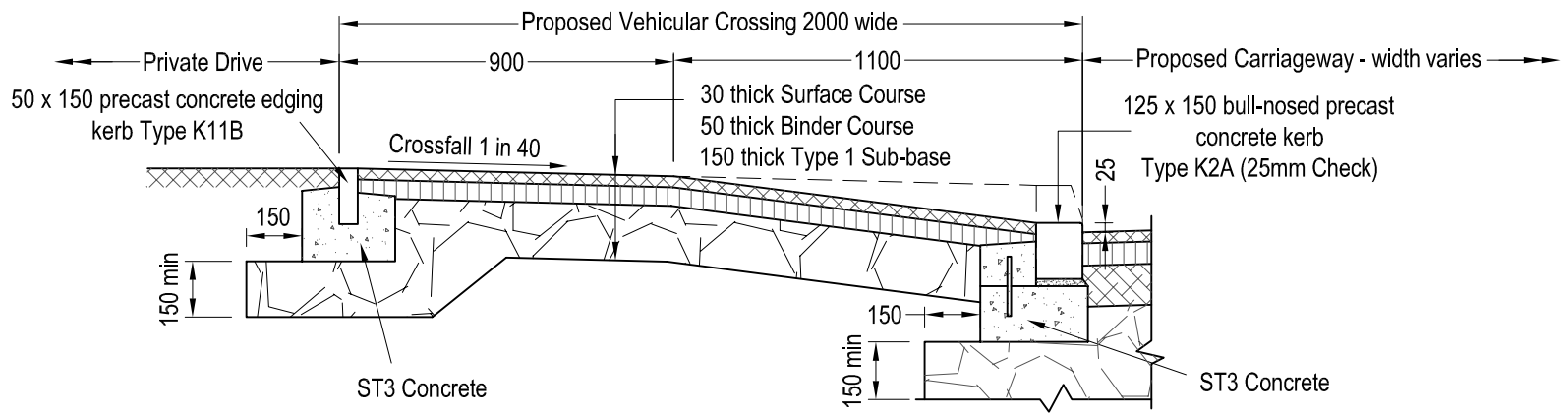

TYPE A2 / VA / 1 or A3 / VA / 1
TYPICAL SECTION

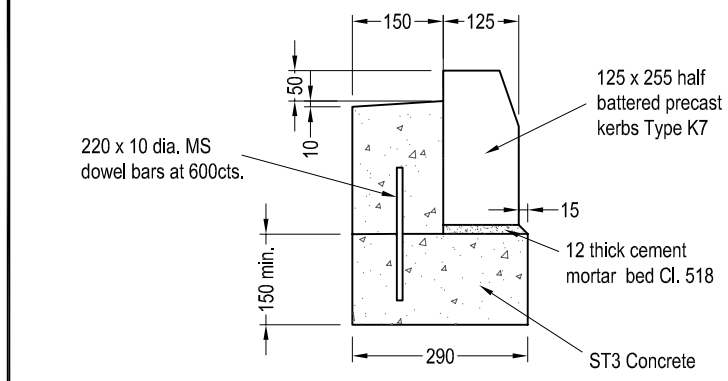

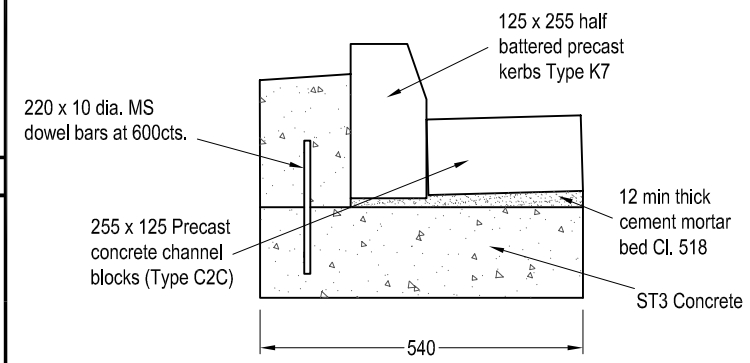

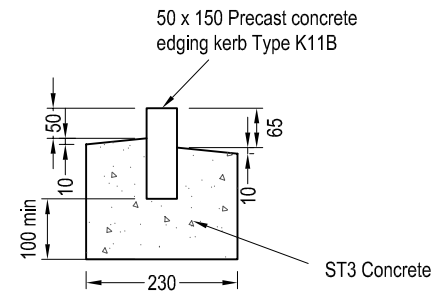

REFERENCES

EXAMPLE:

Type A2/ 1 is used for A2 Major Access Roads of 5500 width where the gradients are such that channel blocks are not required.
Type A3/ 1 is used for A3 Minor Access Roads

STREETWORKS REQUIREMENTS:

The works shall be carried out in accordance with the Council's Estate Roads Construction Guide or any amendment thereof. (All Clauses Refer to ERYC Construction Guide).
Each stage of work **must** be inspected by a highway authority representative. Additional information is given in Clause 107.

The developers are responsible for supervision of their roadworks contractors. The inspections carried out by the Highway Representative does not imply any approval of works nor does it absolve the developers or their contractors from any responsibilities in connection with the Streetworks.

NOTES:

Carriageway shall be laid to normal camber of 1 in 36 with gullies at both edges.
Footways laid to crossfall of 1 in 40 so that slope is towards the carriageway.
All dimensions to be reproduced on each section
Kerb and channel joints to be staggered by a minimum of 100mm

CONSTRUCTION: A2/A3 ACCESS ROADS

Surface Course:	30mm thick AC 10 close surf 100/ 150
Binder Course:	60mm thick AC 20 dense bin 100/ 150 rec
Base Course:	110mm thick AC 32 dense base 100/ 150 rec
Sub-base:	550mm thick Type 1 to Clause 803 or subject to CBR (min. thickness 250mm)
Kerbs:	125mm x 255mm half battered (HB2) Ref. K7
Channel Blocks:	255mm x 125mm (CS2) Ref. C2C (required where longitudinal gradient is flatter than 1% - 1 in 100)

CONSTRUCTION: A2/A3 FOOTWAYS AND VEHICULAR CROSSINGS

Surface Course:	30mm thick AC 6 dense surf 100/ 150
Binder Course:	50mm thick AC 20 dense bin 100/ 150 rec
Sub-base:	150mm thick Type 1 to Clause 803
Edgings:	50mm x 150mm Flat topped (EF) Ref K11B

GENERAL:

1. ALL DIMENSIONS ARE IN MILLIMETRES UNLESS NOTED OTHERWISE.
2. **DO NOT SCALE THE DRAWINGS - IF IN DOUBT ASK.**

REV	DETAILS	BY	DATE

EAST RIDING OF YORKSHIRE COUNCIL

PROJECT.
EAST RIDING OF YORKSHIRE COUNCIL
HIGHWAY DEVELOPMENT CONTROL

TITLE.
CONSTRUCTION ARRANGEMENTS FOR MAJOR AND MINOR RESIDENTIAL ACCESS ROADS (A2/A3)

Drawing Status: CONSTRUCTION

Drawn: ACAD	Date: FEB 09
Checked:	Date:
Scale: NTS	

Drawing No :2.3.4/SD/1/SDS **Rev**: